C-SERiES
C5000 XLE

COMBiLiFT
LiFTING INNOVATION

The electric multi-directional forklift designed for the safe, space saving and productive handling of long and bulky loads.

combilift.com

C-SERiES
C5000 XLE

FRONTAL MODE

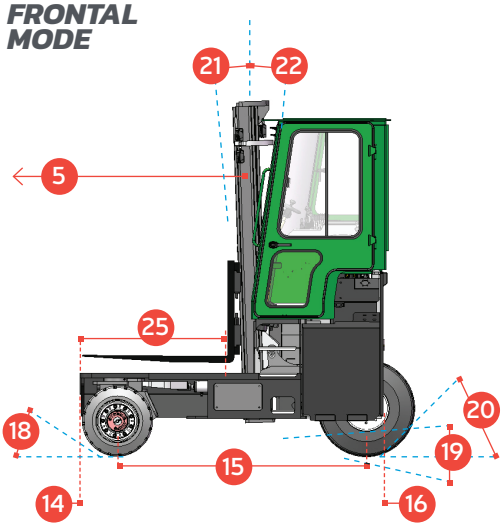

SiDEWARD MODE

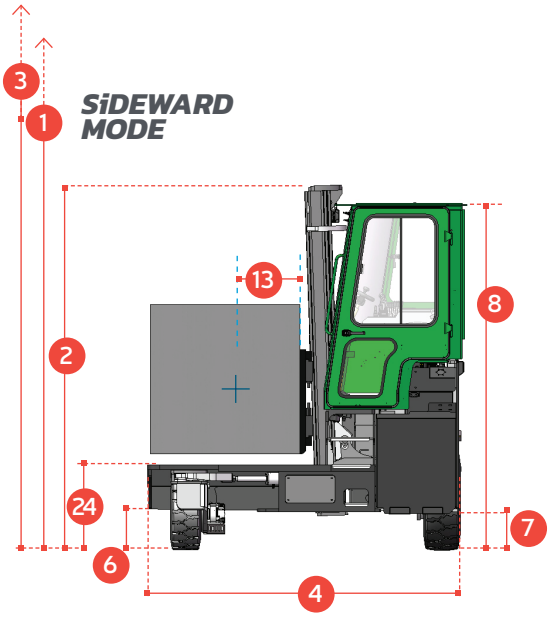

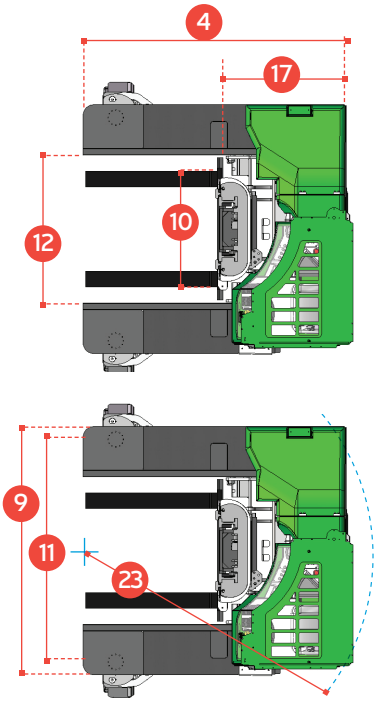

REF.	DESCRIPTION	C5000 XLE
1a	Max. Lift Height	4040 mm
1b	Freelift Height	0 mm
2	Height Mast Closed	2990 mm
3	Max. (Mast raised)	5005 mm
4	Overall Length	2525 mm
5	Mast Travel	1300 mm
6	Ground Clearance Under Mast	275 mm
7	Ground Clearance to Centre of Wheelbase	310 mm
8	Height Over Cab (Without work - lights)	2790 mm
9	Width	2360 mm
10	Outside Spread of Fork Arms	1350 mm
11	Track Front	2115 mm
12	Frame Opening	1400 mm
13	Load Centre Distance	600 mm
14	Overhang Front	310 mm
15	Wheelbase	2055 mm
16	Overhang Back	165 mm
17	Length From Face of Fork	1325 mm
18	Approach Angle	45°
19	Ramp Angle	29°
20	Departure Angle	45°
21	Forward Tilt	3°
22	Backward Tilt	5°
23	Minimum Outside Radius	2500 mm
24	Platform Height	680 mm
25	Platform Length	1200 mm
A	Capacity	5000kg
B	Unladen Weight	7100kg
C	Maximum Ground Speed	14 km/h
D	Gradibility	10%
E	Battery Capacity (V / Ah)	80V / 700Ah
F	Fork Section	150 mm x 50 mm x 1200 mm
G	23x10x12 Superelastic Front Tyre	OD 585 mm / Width 254 mm
H	355/65-15 Superelastic Rear Tyre	OD 800 mm / Width 295 mm
I	Standard Colour	Green & Grey
J	AC Electric Traction Motor x 3	80V / 5kW Rear & 2 x 80V 3kW Front
K	AC Electric Pump Motor	80V / 19kW

International Patent Application No. PCT/EP2014/053066; UK Patent Application No. GB 1302811.3

Multi-Directional

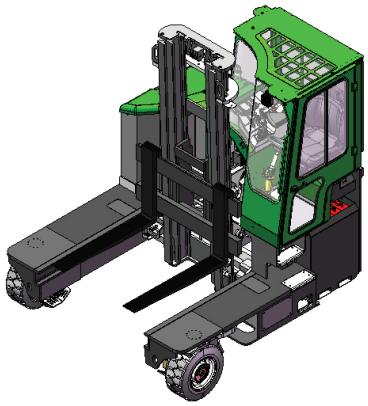

Features Include:

- Rubber Mounted Cabin
- AC Motor Technology
- Multi-Direction Operation
- Load Sensing Steering
- Curtis AC Software
- 4 Way Lever Positioning of Wheels
- 3 Wheel Drive

COMBILIFT HAS A POLICY OF CONTINUOUS PRODUCT DEVELOPMENT AND RESERVES THE RIGHT TO ALTER SPECIFICATIONS WITHOUT PRIOR NOTICE. SPECIFICATIONS AND/OR DIMENSIONS MAY VARY FROM THOSE ILLUSTRATED IN SOME COUNTRIES.

CO. MONAGHAN
IRELAND

+353 47 80500
INFO@COMBILIFT.COM

combilift.com